A01539343_B
P0000300002344
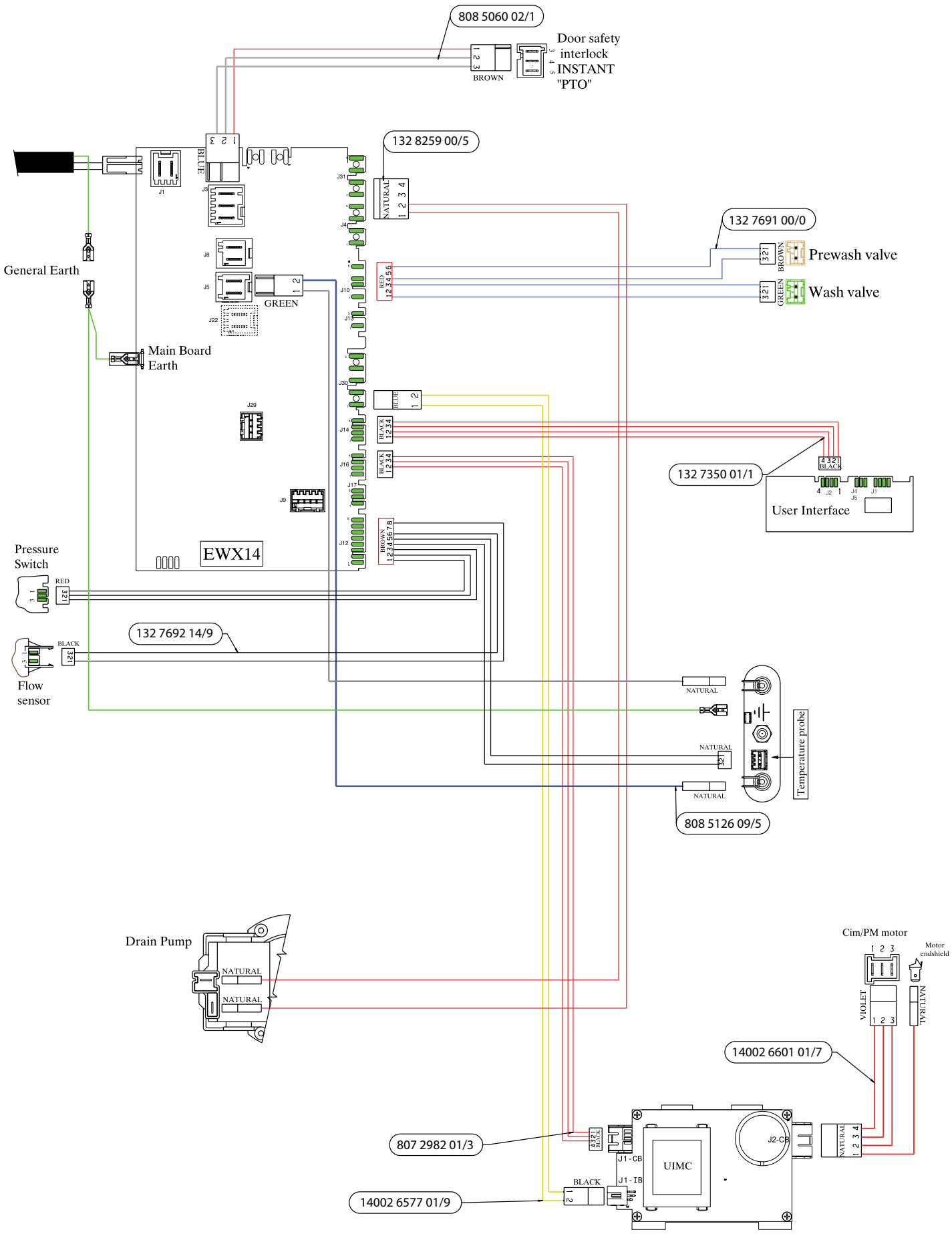
WIRING HARNESSES