A12400207_B
P0000300002423
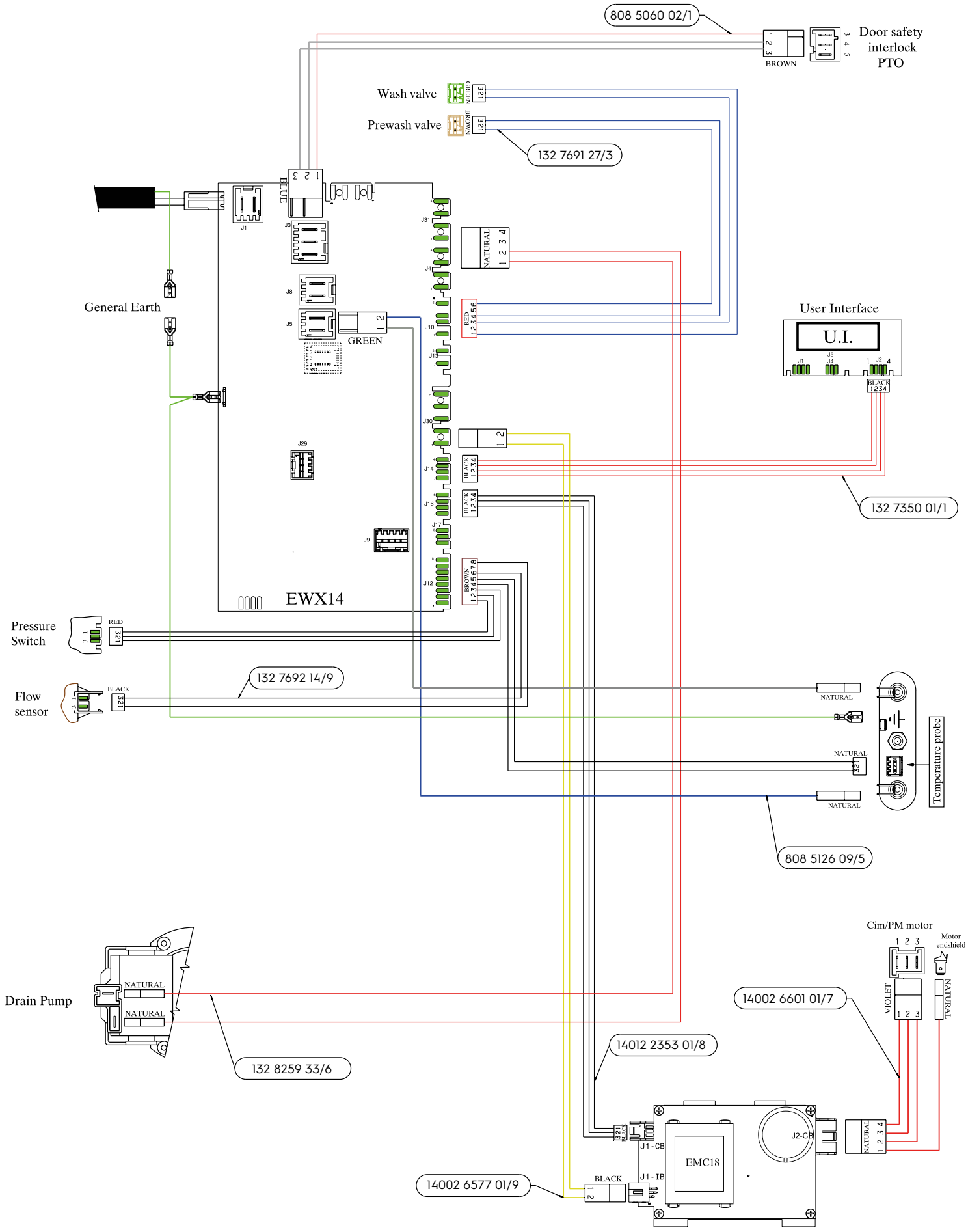
WIRING HARNESSES