A11979125_C
P0000300002752
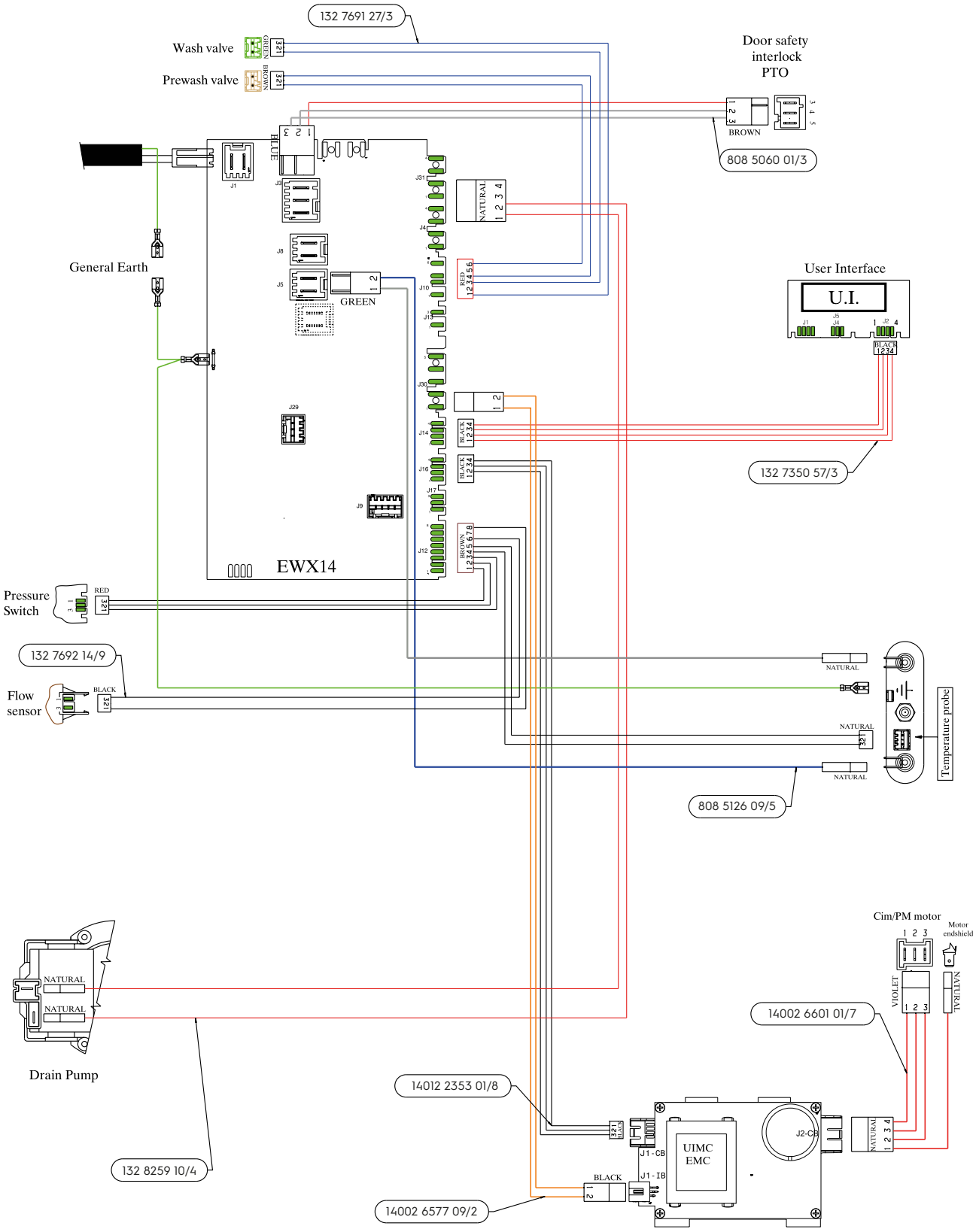
WIRING HARNESSES